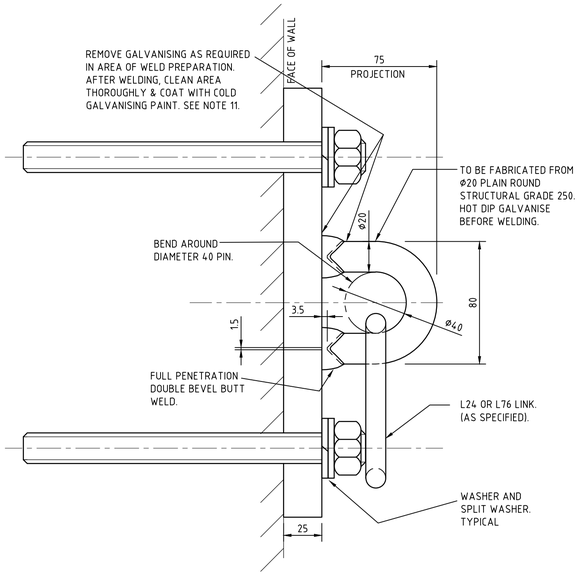

TYPE 'A'
ANCHOR IN CONCRETE

THIS DETAIL MAY BE USED IN REINFORCED BLOCKWORK BUT WITH A REDUCED S.W.L. OF 5.0 TONNES

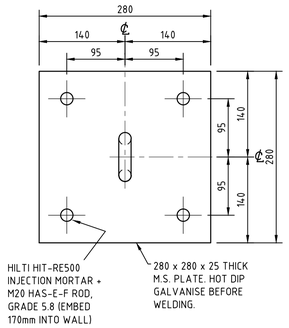

TESTING ANCHORS:
10% OF MASONRY ANCHORS (4 MINIMUM) SHALL BE LOAD TESTED IN ACCORDANCE WITH MANUFACTURERS REQUIREMENTS. TEST REPORTS TO BE SUBMITTED TO AUSGRID

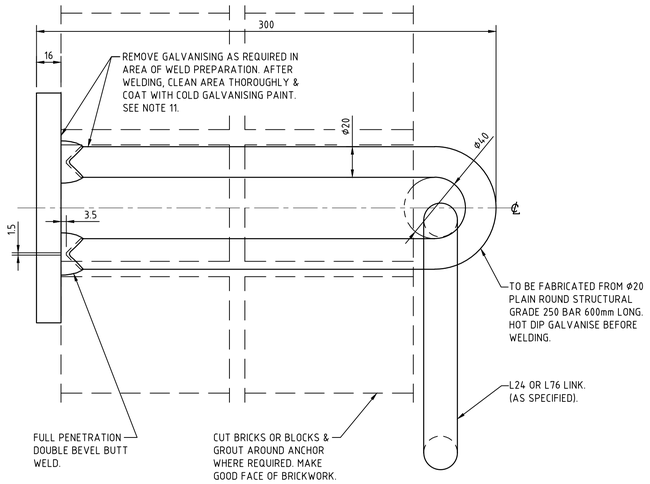

TYPE 'B'
ANCHOR IN BRICK OR BLOCK WALL

NOTE : NOT TO BE USED UNLESS A STRUCTURAL ENGINEER'S CERTIFICATE IS PROVIDED.

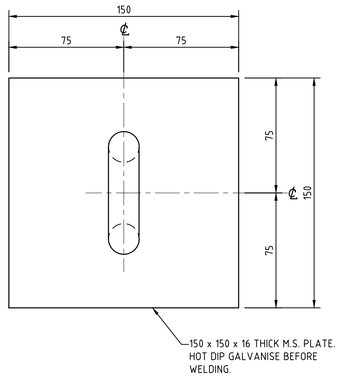

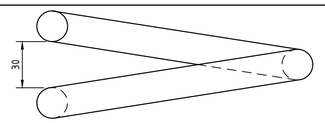

TOP VIEW

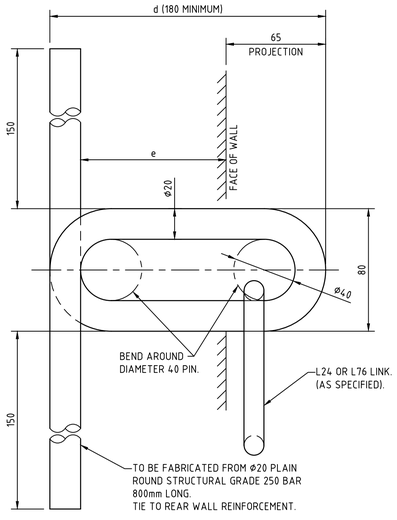

TYPE 'C'
ANCHOR IN CONCRETE OR BLOCK WALL

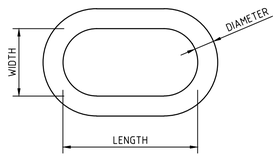

LINK TYPE L76	
REGULAR SERIES OBLONG LINK	
LENGTH	130
WIDTH	63
DIAMETER	22
PWB ANCHOR PART No	40492

LINK TYPE L24	
REGULAR SERIES OBLONG LINK	
LENGTH	88
WIDTH	44
DIAMETER	13
PWB ANCHOR PART No	40490

NOTE : THE LINKS SHALL NOT BE GALVANISED.

d (mm)	e (mm)	SWL (t)
180	95	3.5
210	125	5.0
250	165	7.5

TABLE OF ANCHOR LOAD CAPACITY
(USE 7.5 t SWL UNLESS NOTED OTHERWISE)

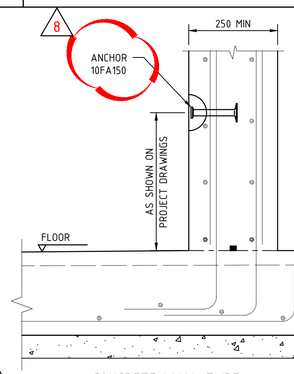

CONCRETE WALL TYPE

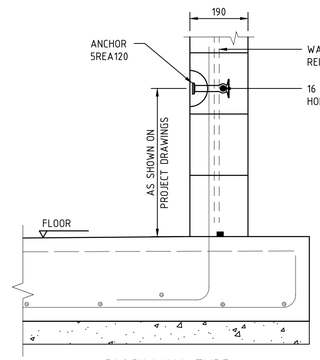

BLOCK WALL TYPE

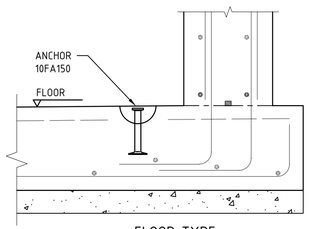

FLOOR TYPE

TYPE 'D' PULLING EYE - REID SWIFTLIFT ANCHOR

1. FOR WALLS WITH MINIMUM WALL THICKNESS OF 200 mm USE ANCHOR 150 LONG, PRODUCT CODE 10FA150. ALL OR APPROVED EQUIVALENT.
2. FOR 170-200 THICK WALLS USE ANCHOR 120 LONG, PRODUCT CODE 5REA120 WITH 16 DIAMETER ROUND BAR 600 LONG (ENSURE HORIZONTAL BAR IS PLACED BEHIND VERTICAL WALL REINFORCEMENT). ALL OR APPROVED EQUIVALENT.
3. ALLOW FOR INSPECTION BEFORE CONCRETE IS POURED.
4. CONCRETE STRENGTH 32 MPa OR MORE.

TYPE 'D' ANCHOR
SCALE 1:10

10FA150 HAS 10 TONE SWL
5REA120 HAS 5 TONE SWL

NOTES

1. ALL STEELWORK TO BE FABRICATED IN ACCORDANCE WITH AS 4100.
2. UNLESS NOTED OTHERWISE:
   (a) ALL HOT ROLLED FLATS TO BE GRADE 250 MINIMUM IN ACCORDANCE WITH AS 1594.
   (b) ALL HOT ROLLED SECTIONS TO BE GRADE 250 MINIMUM IN ACCORDANCE WITH AS 3679.
   (c) ALL HOLLOW SECTIONS TO BE GRADE C350 IN ACCORDANCE WITH AS 1163.
3. AFTER FABRICATION, ALL BURRS AND SHARP EDGES TO BE REMOVED.
4. ALL WELDING TO BE IN ACCORDANCE WITH AS 1554 PART 1.
5. CONSUMABLES (ELECTRODES) SHALL BE MATCHED WITH THE STEEL TYPE IN COMPLIANCE WITH AS/NZS 1554.1 TABLE 4.6.1(A) & THE RELEVANT COLUMNS OF THE TABLE DEPENDING ON THE TYPE OF WELDING PROCESS BEING UNDERTAKEN.
6. UNLESS NOTED OTHERWISE:
   (a) ALL WELDS SHALL BE 6mm CONTINUOUS FILLET WELDS, CATEGORY GP.
   (b) BUTT WELDS SHALL BE CONTINUOUS FULL PENETRATION, CATEGORY SP.
   (c) ALL WELDS TO BE CARRIED OUT IN THE SHOP UNLESS NOTED AS `WELD ON SITE'.
7. WELDS SHALL BE INSPECTED TO AS/NZS 1554.1 CLAUSE 7.3 (VISUAL INSPECTION OF WORK) UNLESS THE WELDING PROCESS IS SUPERVISED AND CARRIED OUT BY QUALIFIED PERSONNEL AS DEFINED IN AS/NZS 1554.1 CLAUSE 4.12.1 AND CLAUSE 4.12.2.
8. AFTER FABRICATION, ALL WELDS TO BE CHIPPED FREE OF SLAG.
9. AFTER FABRICATION, ALL STEELWORK TO BE HOT DIP GALVANISED TO AS 4680.
10. AFTER GALVANISING, ALL HOLES TO BE CLEARED AND SHARP EDGES TO BE REMOVED.
11. WHERE THE GALVANISING FINISH HAS BEEN REMOVED, AREA TO BE TREATED WITH COLD GALVANISING PAINT SIMILAR TO GALMET OR ZINCFIX. COATINGS TO BE APPLIED IN ACCORDANCE WITH THE MANUFACTURERS INSTRUCTIONS.
12. DO NOT GALVANISE THE LINK.
13. MAXIMUM PULL NORMAL TO THE WALL FACE - LINK TYPE L76 - 7.6 TONNE, LINK TYPE L24 - 2.5 TONNE.
14. A SIGN SHALL BE PROVIDED ADJACENT TO THE PULLING EYE GIVING THE LOAD CAPACITY. EG. S.W.L. 7.6 TONNES

CAD DRAWING
DO NOT MANUALLY AMEND

AMENDMENTS

1 DRAWING REDRAWN ON AUTOCAD. NOTES UPDATED. BLOCK WALLS ADDED TO EACH TYPE. LINK DETAILS UPDATED TO SUIT CURRENT AVAILABLE COMPONENTS. TYPE B NOW 300 LONG WAS 290. NOTE ADDED REGARDING ENGINEER'S CERTIFICATE. C.SAWDY 8.12.2004. CHECKED D. STANBURY

2 ISSUED FOR CONSTRUCTION. TYPE A DETAIL ADDED. DWN: A.SPITERI CHKD: D.STANBURY DATE: 30-06-08 APP'D by: K.GALLEN

3 NOTES REVISED ISSUED FOR CONSTRUCTION DWN: J.ABDILLA CHKD: P.LOVARINI DATE: 12-05-10 APP'D by: K.GALLEN

4 TABLE OF ANCHOR LOAD CAPACITY ADDED ISSUED FOR CONSTRUCTION DWN: M.LJOLJIC CHKD: D.STANBURY DATE: 05-11-2011 APP'D by: D.STANBURY

5 NOTE ADDED. ISSUED FOR CONSTRUCTION. DWN: A.SPITERI CHKD: D.STANBURY DATE: 10-09-12 APP'D by: D.STANBURY

6 TYPE 'D' ANCHOR ADDED. ISSUED FOR CONSTRUCTION. DWN: M.LJOLJIC CHKD: D.STANBURY DATE: 13-01-15 APP'D by: D.STANBURY

7 ANCHOR NOTE MODYFIED. ISSUED FOR CONSTRUCTION. DWN: M.LJOLJIC CHKD: D.STANBURY DATE: 03-02-2015 APP'D by: D.STANBURY

8 ANCHOR NOTE MODYFIED. ISSUED FOR CONSTRUCTION. DWN: M.LJOLJIC CHKD: D.STANBURY DATE: 27-09-2015 APP'D by: D.STANBURY

0 5 10
CENTIMETRES ON ORIGINAL DRAWING AT SCALE 1:2

NETWORK STANDARD
Ausgrid
570 George Street
SYDNEY NSW 2000

SCALE	1:2
DESIGNED	-
DRAWN	RAY KENDRICK
CHECKED	GB
APPROVED	-
DATE	JUNE 1984
PRJTRK No.	-
PROJECT NUMBER	-

SUBSTATION & CABLE PITS PULLING EYES TYPES A, B, C & D ARRANGEMENT & DETAILS

DRAWING No 63678 | SHEET 1 | AMD 8 | SIZE A1

20111014

©