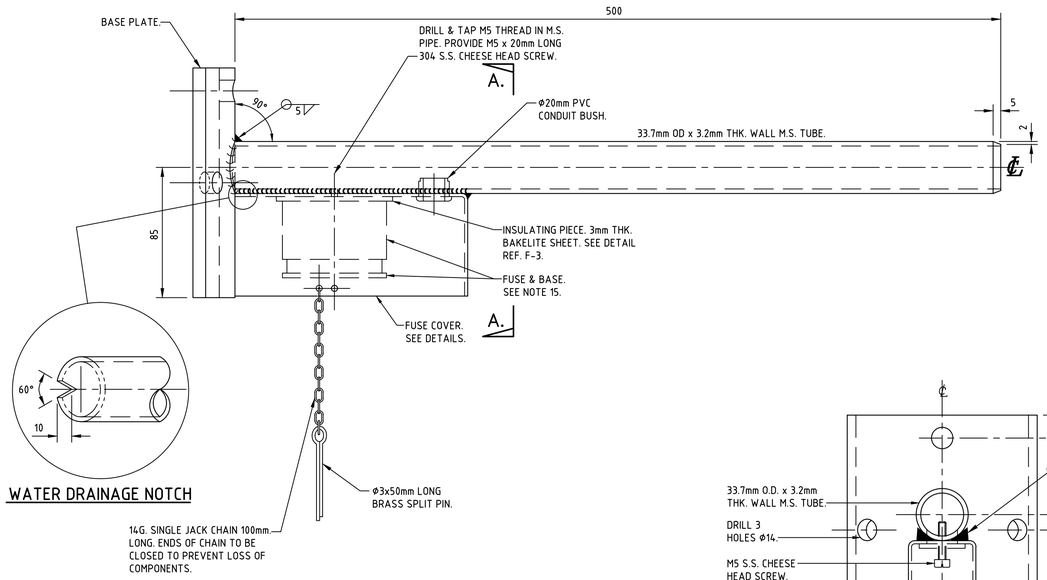

WATER DRAINAGE NOTCH

0.5m OUTREACH POLE MOUNTED BRACKET

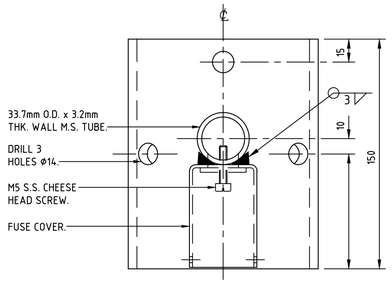

SECTION A - A

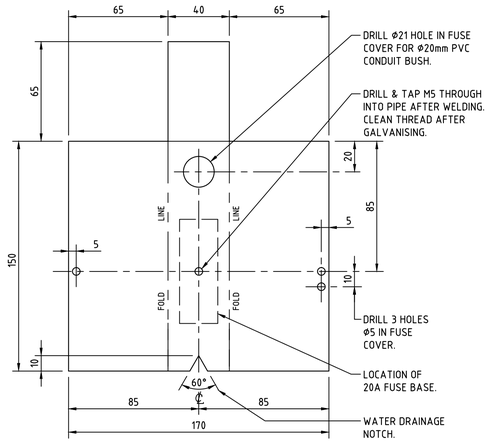

DEVELOPMENT OF FUSE COVER

MATERIAL : 1.6mm TH'K. MILD STEEL.

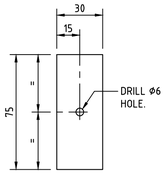

INSULATING PIECE

MATERIAL : 3mm BAKELITE SHEET

SCALE 1 : 2

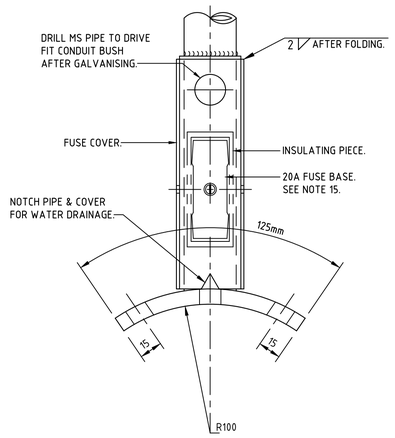

BOTTOM VIEW

MATERIAL : 10mm THK. M.S. PLATE
1.6mm THK. M.S.

SCALE 1 : 2

REFERENCE DRAWINGS

RANGE OF POLE & WALL MOUNTED STREET LIGHTING BRACKETS B1-66251

NOTES

1. ALL STEELWORK TO BE FABRICATED IN ACCORDANCE WITH AS 3990.
2. UNLESS NOTED OTHERWISE:
   (a) ALL HOT ROLLED FLATS TO BE GRADE 250 MINIMUM IN ACCORDANCE WITH AS 1594.
   (b) ALL HOT ROLLED SECTIONS TO BE GRADE 250 MINIMUM IN ACCORDANCE WITH AS 3679.
   (c) ALL HOLLOW SECTIONS TO BE GRADE C350 IN ACCORDANCE WITH AS 1163.
3. AFTER FABRICATION, ALL BURRS AND SHARP EDGES TO BE REMOVED.
4. ALL WELDING TO BE IN ACCORDANCE WITH AS 1554 PART 1.
5. CONSUMABLES (ELECTRODES) SHALL BE MATCHED WITH THE STEEL TYPE IN COMPLIANCE WITH AS/NZS 1554.1 TABLE 4.6.1(A) & THE RELEVANT COLUMNS OF THE TABLE DEPENDING ON THE TYPE OF WELDING PROCESS BEING UNDERTAKEN.
6. UNLESS NOTED OTHERWISE:
   (a) ALL WELDS SHALL BE 6mm CONTINUOUS FILLET WELDS, CATEGORY GP.
   (b) BUTT WELDS SHALL BE CONTINUOUS FULL PENETRATION, CATEGORY SP.
   (c) ALL WELDS TO BE CARRIED OUT IN THE SHOP UNLESS NOTED AS `WELD ON SITE'.
7. WELDS SHALL BE INSPECTED TO AS/NZS 1554.1 CLAUSE 7.3 (VISUAL INSPECTION OF WORK) UNLESS THE WELDING PROCESS IS SUPERVISED AND CARRIED OUT BY QUALIFIED PERSONNEL AS DEFINED IN AS/NZS 1554.1 CLAUSE 4.12.1 AND CLAUSE 4.12.2.
8. AFTER FABRICATION, ALL WELDS TO BE CHIPPED FREE OF SLAG.
9. AFTER FABRICATION, ALL STEELWORK TO BE HOT DIP GALVANISED TO AS 4680.
10. AFTER GALVANISING, ALL HOLES TO BE CLEARED AND SHARP EDGES TO BE REMOVED.
11. WHERE THE GALVANISING FINISH HAS BEEN DAMAGED, AREA TO BE TREATED WITH COLD GALVANISING PAINT SIMILAR TO ZINCFIX. COATINGS TO BE APPLIED IN ACCORDANCE WITH THE MANUFACTURERS INSTRUCTIONS.
12. BRACKET TO BE SUPPLIED WITH ONE FUSE FITTED AS SHOWN.
13. TOTAL MASS OF BRACKET IS 3.5Kg.
14. IF ANY MATERIAL SIZE DETAILED IS CHANGED, PRIOR APPROVAL MUST BE OBTAINED FROM AUSGRID.
15. THE FUSE HOLDER SHALL BE A FULLY SHROUDED 20A, FRONT CONNECTED TYPE REFERENCE 'F1" TO AS 60269.2.1. THE FUSE LINK SHALL BE 10A, REFERENCE 'F1' TO AS 60269.2.1.

CAD DRAWING
DO NOT MANUALLY AMEND

A M E N D M E N T S

1. REDRAWN ON ACAD. FUSE BASE FROM 3A-ACT FORCELAIN TO NEW 700 SERIES. SIMILAR. FUSE COVER SCREWED TO LIGHTING BRACKET INSTEAD OF WELDING.
AMC DECEMBER 91
CHECKED. KEM.
PROD No. 25261.

2. FUSE COVER ALTERED REF C-4.
C.SAWDY 8.12.92
PROD No 25261
CHECKED KEM

3. TUBE OD ALTERED TO NEW STANDARDS.
RWG JUNE 94
M190
CHECKED KEM

4. FUSE BASE CHANGEDD FROM 'MEM 700' TO 'MEM ADV20NFF' (REF B2, B4)
RS 14.12.00
CHECKED PIE
APPROVED PIE

5. DRAWING BORDER UPDATED. FUSE COVER WAS SECURED BY 8 GUAGE TEK SCREWS, NOW WELDED. NOTES UPDATED. FUSE HOLDER & FUSE LINK CLARIFIED. SEE NOTE 15.
C. SAWDY 19.02.2013

6. DRAWING TITLE CHANGED.
DRWN: C. SAWDY
CHKD: PHIL HUDSON
DATE: 08.03.2016
APP'D by: PHIL HUDSON

0 10 20 cm
CENTIMETRES ON ORIGINAL DRAWING AT SCALE 1:2

NETWORK STANDARD
Ausgrid
MECHANICAL DESIGN
570 GEORGE STREET
SYDNEY NSW 2000

SCALE	1 : 2
DESIGNED	
DRAWN	R.G.
CHECKED	K.E.M.
APPROVED	EM-ES
DATE	13.04.1983
PRJTRK No.	
PROJECT NUMBER	20082

STREET LIGHTING
0.5m OUTREACH - 0 DEGREE UPCAST
POLE MOUNTED BRACKET
ARRANGEMENT AND DETAILS

DRAWING No 62405 SHEET 1 AMD 6 SIZE A1

20111014