ASSEMBLY NOTES

A. THE ADAPTOR PLATE (PART 4) IS TO BE USED WHEN A TRANSFORMER IS TO BE INSTALLED ON A COMPOSITE POLE. IT IS NOT TO BE USED ON A TIMBER POLE INSTALLATION.

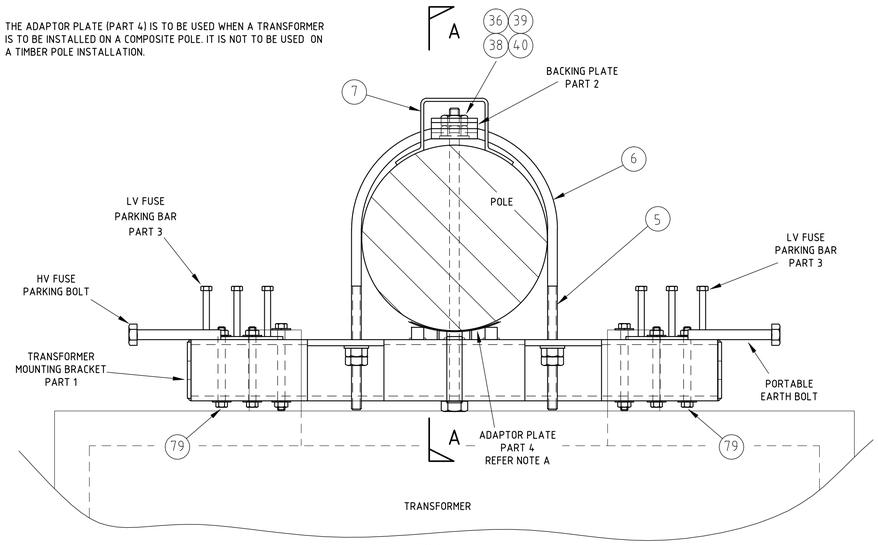

TOP VIEW

SEE DRAWINGS LISTED IN THE REFERENCE DRAWING TABLE FOR ITEM NUMBERS

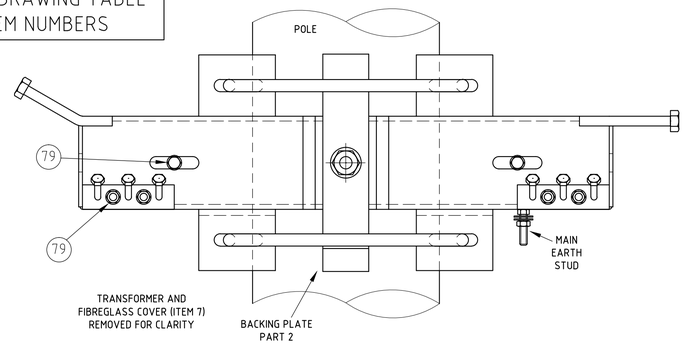

FRONT VIEW

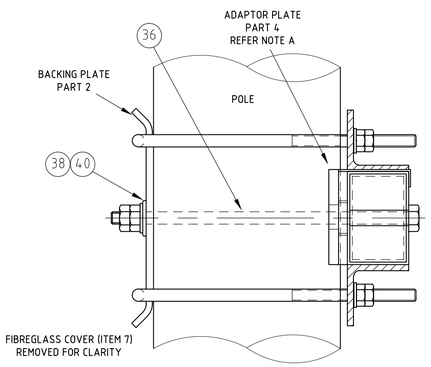

SECTION A-A

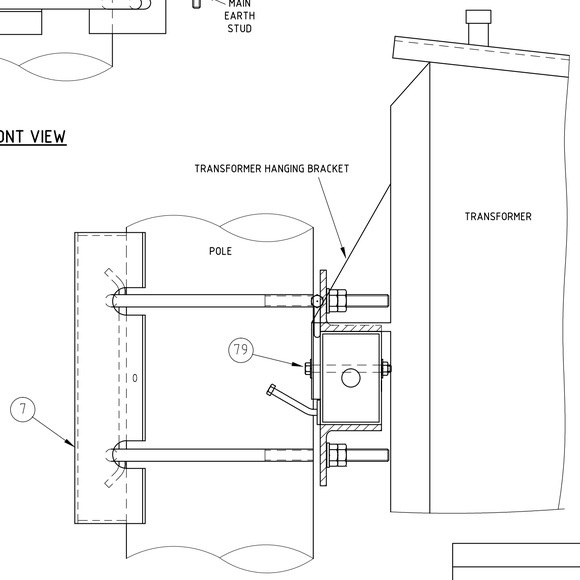

SIDE VIEW

ASSEMBLY DETAILS

SCALE 1:5

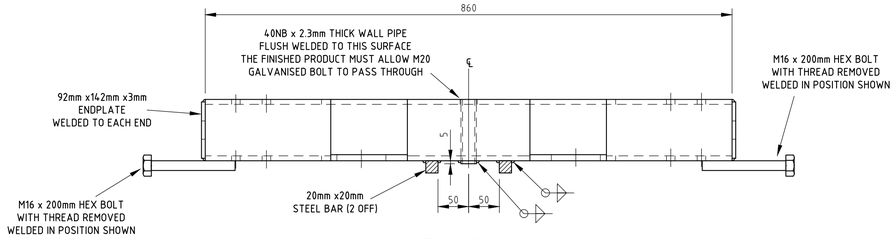

TOP VIEW

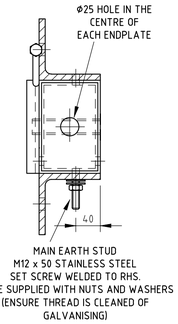

SIDE VIEW

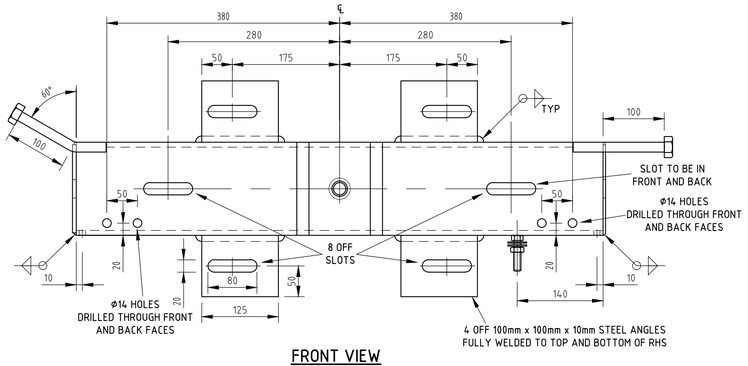

FRONT VIEW

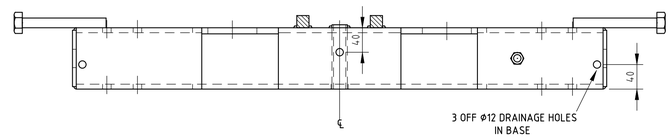

BOTTOM VIEW

PART 1
TRANSFORMER MOUNTING BRACKET

MATERIAL: 150mm x 100mm x 6mm RHS

STOCK CODE 176962

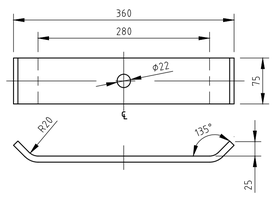

PART 2
BACKING PLATE

1 OFF

MATERIAL: 75mm x10mm FLAT STEEL BAR

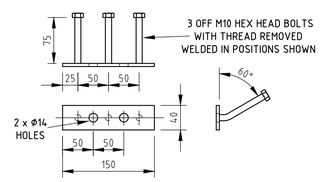

PART 3
FUSE PARKING BAR

2 OFF

MATERIAL: 40mm x 5mm FLAT STEEL BAR

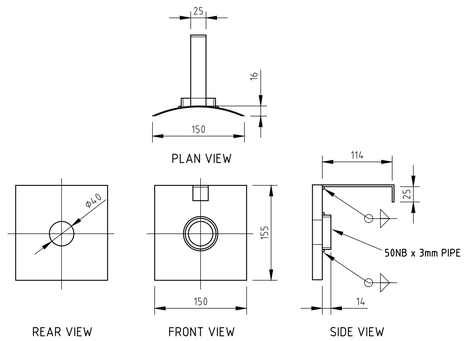

PART 4
ADAPTOR PLATE

1 OFF

MATERIAL: 3mm THICK MILD STEEL

MANUFACTURING DETAILS

SCALE 1:5

MANUFACTURING NOTES

1. ALL STEELWORK TO BE FABRICATED IN ACCORDANCE WITH AS 3990.
2. UNLESS NOTED OTHERWISE:
   (a) ALL HOT ROLLED FLATS TO BE GRADE 250 MINIMUM IN ACCORDANCE WITH AS 1594.
   (b) ALL HOT ROLLED BARS & SECTIONS TO BE GRADE 300 MINIMUM IN ACCORDANCE WITH AS 3679.
   (c) ALL HOLLOW SECTIONS TO BE GRADE C250 MINIMUM IN ACCORDANCE WITH AS 1163.
3. AFTER FABRICATION, ALL BURRS AND SHARP EDGES TO BE REMOVED.
4. ALL WELDING TO BE IN ACCORDANCE WITH AS 1554.1.
   (a) A WELDING PROCEDURE SHALL BE QUALIFIED BEFORE WELDING.
   (b) A WELDING PROCEDURE SPECIFICATION (WPS) TO BE DEVELOPED FROM THE PROCEDURE QUALIFICATION RECORD (PQR).
   (c) PRODUCE DOCUMENTARY EVIDENCE OF MACRO TEST, TENSILE AND BEND TEST IN ACCORDANCE WITH AS 1554.1
5. CONSUMABLES (ELECTRODES) SHALL BE MATCHED WITH THE STEEL TYPE IN COMPLIANCE WITH AS/NZS 1554.1 TABLE 4.6.1(A) & THE RELEVANT COLUMNS OF THE TABLE DEPENDING ON THE TYPE OF WELDING PROCESS BEING UNDERTAKEN.
6. UNLESS NOTED OTHERWISE:
   (a) ALL WELDS SHALL BE 6mm CONTINUOUS FILLET WELDS, CATEGORY GP.
   (b) BUTT WELDS SHALL BE CONTINUOUS FULL PENETRATION, CATEGORY SP.
   (c) ALL WELDS TO BE CARRIED OUT IN THE SHOP UNLESS NOTED AS `WELD ON SITE'.
7. WELDS SHALL BE INSPECTED TO AS/NZS 1554.1 CLAUSE 7.3 (VISUAL INSPECTION OF WORK) UNLESS THE WELDING PROCESS IS SUPERVISED AND CARRIED OUT BY QUALIFIED PERSONNEL AS DEFINED IN AS/NZS 1554.1 CLAUSE 4.12.1 AND CLAUSE 4.12.2.
8. AFTER FABRICATION, ALL WELDS TO BE CHIPPED FREE OF SLAG.
9. AFTER FABRICATION, ALL STEELWORK TO BE HOT DIP GALVANISED TO AS 4680. GALVANISING MINIMUM AVERAGE COATING THICKNESS AND MASS TO BE 125µm, 900g/m². AVERAGE THICKNESS SHALL BE DETERMINED IN ACCORDANCE WITH AS 2312.
   SURFACE FINISH : THE GALVANISED COATING TO BE CONTINUOUS, ADHERENT, AS SMOOTH AND EVENLY DISTRIBUTED AS POSSIBLE, AND FREE FROM ANY DEFECT THAT IS DETRIMENTAL TO THE STATED END USE OF THE COATED ARTICLE. ANY REPARATION IS TO CARRIED OUT AS PER CLAUSE 8 OF AS 4680.
   ADHESION : THE GALVANISED COATING SHALL BE SUFFICIENTLY ADHERENT TO WITHSTAND NORMAL HANDLING DURING TRANSPORT AND ERECTION.
10. AFTER GALVANISING, ALL HOLES TO BE CLEARED AND SHARP EDGES TO BE REMOVED.
11. WHERE THE GALVANISING FINISH HAS BEEN DAMAGED, AREA TO BE TREATED WITH COLD GALVANISING PAINT SIMILAR TO ZINCFIX. COATINGS TO BE APPLIED IN ACCORDANCE WITH THE MANUFACTURERS INSTRUCTIONS.
12. ALL BOLTS, NUTS AND WASHERS TO BE HOT DIP GALVANISED TO AS 1214 UNLESS OTHERWISE STATED.
13. ALL BOLTS TO BE GRADE 4.6/s TO AS 1111 UNLESS OTHERWISE STATED.

REFERENCE DRAWINGS	
TITLE	DRAWING No
3 PHASE POLE TRANSFORMER ON TIMBER POLE GENERAL ARRANGEMENT	228821
3 PHASE POLE TRANSFORMER ON COMPOSITE POLE GENERAL ARRANGEMENT	244219

CAD DRAWING
(DO NOT MANUALLY AMEND)

AMENDMENTS

10. NEW AUTOCAD DRAWING MADE. SHEET 2&3 INCORPORATED INTO SHEET 1. PART 4 AND ASSOCIATED HOLES DELETED FROMPER PART 3 WAS 'U' BOLT. FORMER PART 5 NOW PART 3 REFERENCE DWG ADDED. NOTES 2, 3 & 4 ADDED. OPEX 06568-1-1-6 C.MABBUTT 6.3.14 CHECKED: P.JARVIS APPROVED: P.JARVIS

11. NOTES REVISED. CHECKED: M.VENDRIG DRAWN: M.IOANNIDES CHECKED: P.HUDSON 3.7.15 APPROVED: K.GALLEN

12. NEW PART 4 FOR COMPOSITE POLES ADDED. DRAWING NOTES DIVIDED INTO MANUFACTURING AND ASSEMBLY. REFERENCE DRAWING 244219 ADDED. PN: 12902184.0 P.JARVIS 19.12.17 CHECKED: C.MABBUTT APPROVED: D.GRCEV

CONSTRUCTION

NETWORK STANDARD
Ausgrid
ASSET ENGINEERING, POLICY AND STANDARDS
TRANSMISSION & DISTRIBUTION SUBSTATION ENGINEERING
570 GEORGE STREET, SYDNEY

SCALE	AS SHOWN
DESIGNED	SIGNED ON ORIGINAL
DRAWN	
CHECKED	
APPROVED	
DATE	30.11.2000
PROJECT NUMBER	
PROJTRAK NUMBER	

STANDARD CONSTRUCTION
DISTRIBUTION SUBSTATION
TRANSFORMER POLE MOUNTING BRACKET
MANUFACTURING AND ASSEMBLY DETAILS

SIZE	DRAWING No	SHEET	AMD
A1	566101	1	12

20110714

©