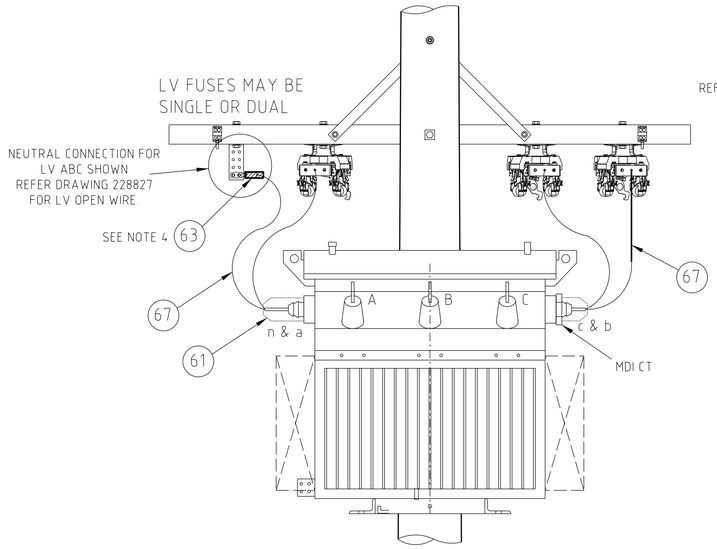

LV TRANSFORMER CONNECTION DETAILS
FRONT VIEW

SCALE 1:20

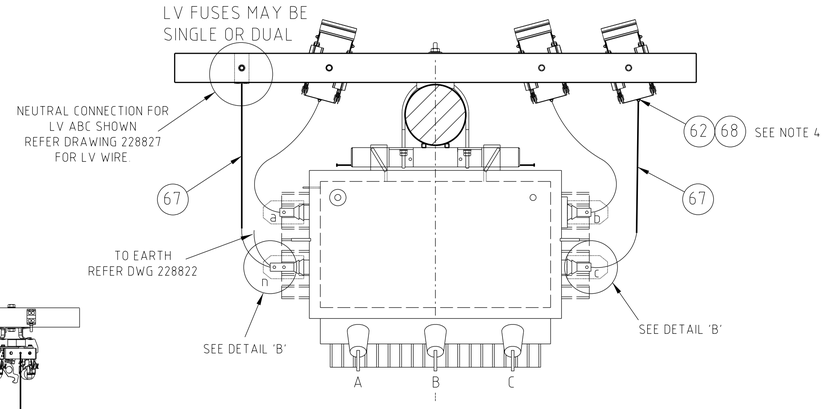

LV TRANSFORMER CONNECTION DETAILS
PLAN VIEW

SCALE 1:20

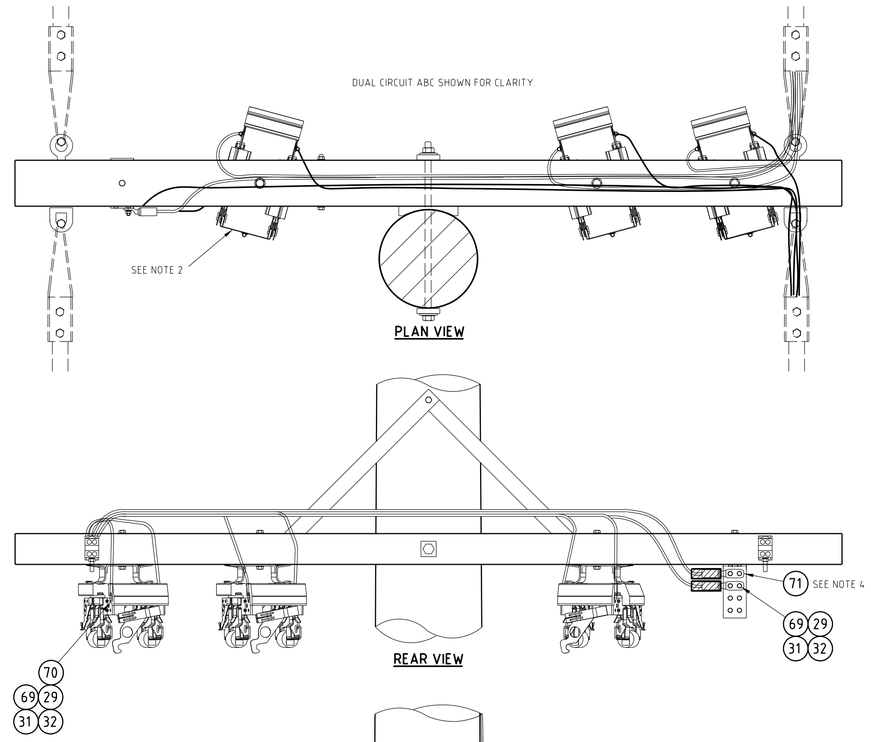

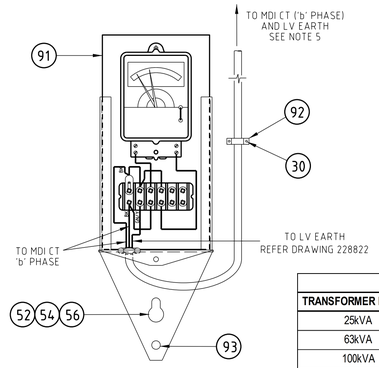

MDI CONNECTIONS

SCALE 1:5

MDI CT RATIOS	
TRANSFORMER RATING	CT RATIO
25kVA	150/5
63kVA	150/5
100kVA	400/5
200kVA	400/5
315kVA	800/5
400kVA	800/5

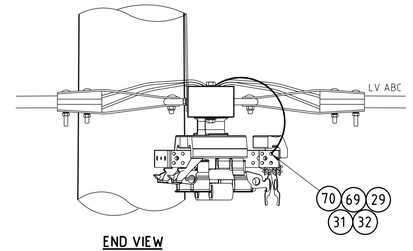

END VIEW

LV ABC CONNECTION DETAILS

SCALE 1:10

REFER TO DRAWING 228827
FOR OPEN WIRE DETAILS

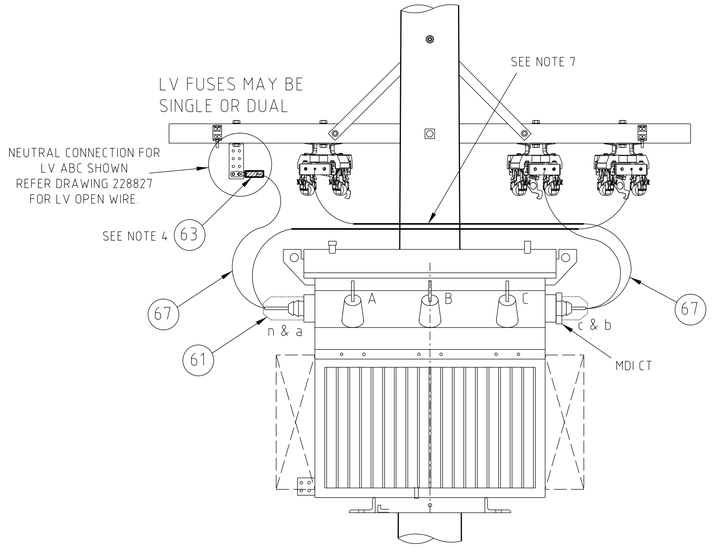

LV TRANSFORMER CONNECTION DETAILS
(LV PHASE CROSS)
FRONT VIEW

SCALE 1:20

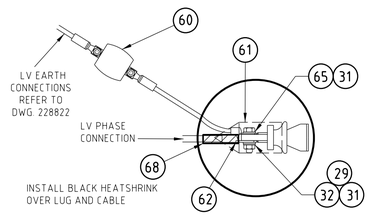

PHASE BUSHING

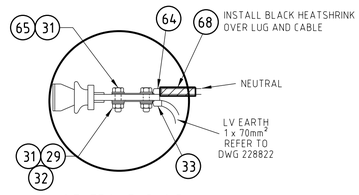

NEUTRAL BUSHING

DETAIL 'B'
LV TRANSFORMER CONNECTIONS

SCALE 1:5

CABLE SIZES (Item 67)		
TRANSFORMER SIZE	PHASE CONDUCTOR (Cu/XLPE - Black Insulation)	NEUTRAL CONDUCTOR (Cu/XLPE - Black Insulation)
UP TO 100kVA	1 X 95mm²	1 X 95mm²
200kVA	1 X 185mm² (37/2.52)	1 X 185mm² (37/2.52)
400kVA	1 X 240mm² (1211/0.50)	1 X 240mm² (1211/0.50)

TABLE 1 - LV TRANSFORMER CABLE SIZES

LV BUSHING TYPE (Item 61)	
TRANSFORMER SIZE	LV BUSHING COVER (STOCKCODE)
100kVA AND UNDER	H22032
200kVA AND 400kVA	H21858

TABLE 2 - LV BUSHING COVER

NOTES

1. WHEN STANDING ON POLE FACING REAR OF TRANSFORMER DUAL CIRCUIT LV FUSES TO BE CONNECTED AS FOLLOWS :
   - LH FUSE CONNECTS TO CIRCUIT IN FRONT OF THE TRANSFORMER
   - RH FUSE CONNECTS TO CIRCUIT AT THE REAR OF THE TRANSFORMER.
2. SINGLE CIRCUIT LV FUSES MAY BE USED WHERE SPECIFIED
3. PARALLELED ABC TO TERMINATE ON THE LOAD SIDE OF THE SWITCH-FUSE UNIT
4. PROVIDE WATER BLOCKING ON LUGS USING HEATSHRINK ACROSS BARREL AND CABLE
5. MDI's ARE TO BE INSTALLED ON ALL SUBSTATIONS EXCEPT FOR SINGLE CUSTOMER INSTALLATIONS AND TRANSFORMERS BELOW 100kVA (UNLESS OTHERWISE SPECIFIED). MDI CT IS SUPPLIED WITH TRANSFORMER b PHASE BUSHING AND IS TO BE CONNECTED TO PRE-WIRED CABLING SUPPLIED WITH MDI UNIT. SECURE CT PRE-WIRED CABLING USING ADDITIONAL CONDUIT, SADDLES AND CABLE TIES AS REQUIRED. CONNECT MDI EARTH CABLE AS DETAILED ON DRAWING 228822 USING CONDUIT, SADDLES AND CABLE TIES AS REQUIRED.
6. WHEN LV PHASE CROSSING IS REQUIRED, USE THE APPROPRIATE UV STABILISED CABLE TIES TO BUNDLE CABLES TOGETHER AND SADDLE TO POLE AS REQUIRED.

ITEM NUMBERS ARE SHOWN ◯

REFER TO DRAWINGS 228821 OR 244219 FOR ITEM NUMBERS

AMENDMENTS			
CAD DRAWING DO NOT MANUALLY AMEND			
4	DWN: PATRICIA RIOS CHKED: PHILLIP JONES DATE: 30/04/2020 ITEM NUMBERS CORRECTED.	APPD by: GLENN FORD	
5	DWN: P.RIOS CHKED: C.MABBUTT DATE: 21/10/2021 MDI CT RATIO TABLE ADDED.	APPD by: P.TURRIN	

ASSOCIATED DRAWINGS	
3 PHASE POLE TRANSFORMER ON TIMBER POLE GENERAL ARRANGEMENT	228821
3 PHASE POLE TRANSFORMER ON COMPOSITE POLE GENERAL ARRANGEMENT	244219

NETWORK STANDARD
Ausgrid
145 NEWCASTLE RD WALLSEND, NSW 2287

SCALE	AS SHOWN
DESIGNED	-
DRAWN	C.MABBUTT
CHECKED	P.JARVIS
APPROVED	D.GRCEV
DATE	15/10/02
PROJECT NUMBER	STD
PROJTRAK NUMBER	-

STANDARD CONSTRUCTION
3 PHASE - 11kV POLE MOUNTED
DISTRIBUTION SUBSTATION 0-400kVA
LV TRANSFORMER & LV ABC
CONNECTIONS

SIZE	DRAWING No	SHEET	AMD
A1	228824	01	5

20110901

©