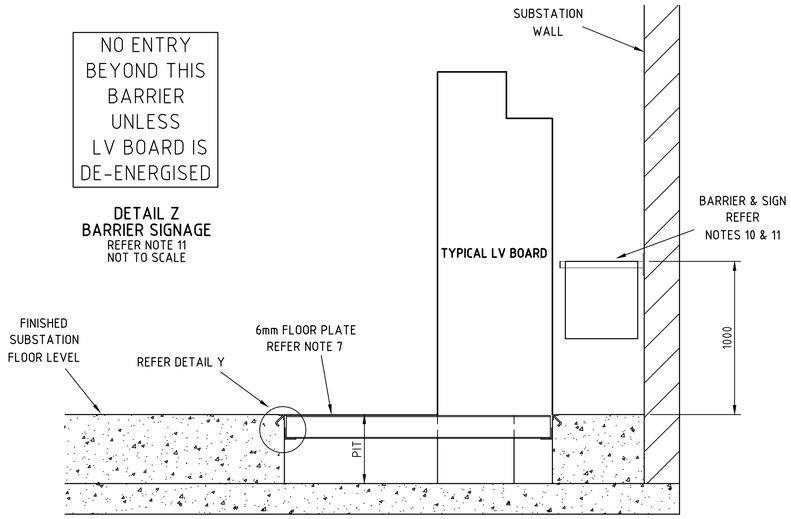

SECTION A-A
SCALE 1:20

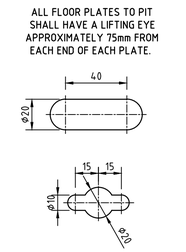

DETAIL X
LIFTING EYE
EITHER DETAIL IS ACCEPTABLE
SCALE 1:2

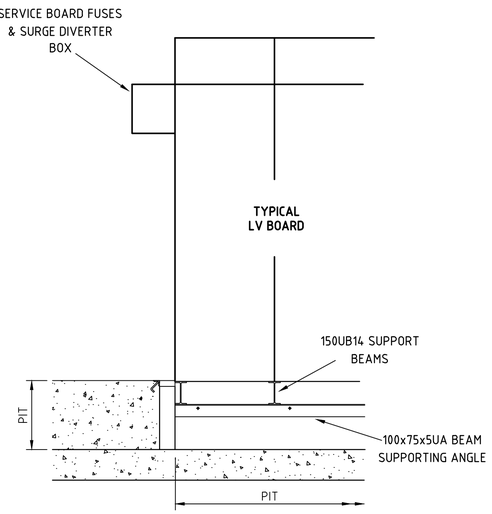

SECTION B-B
SCALE 1:20

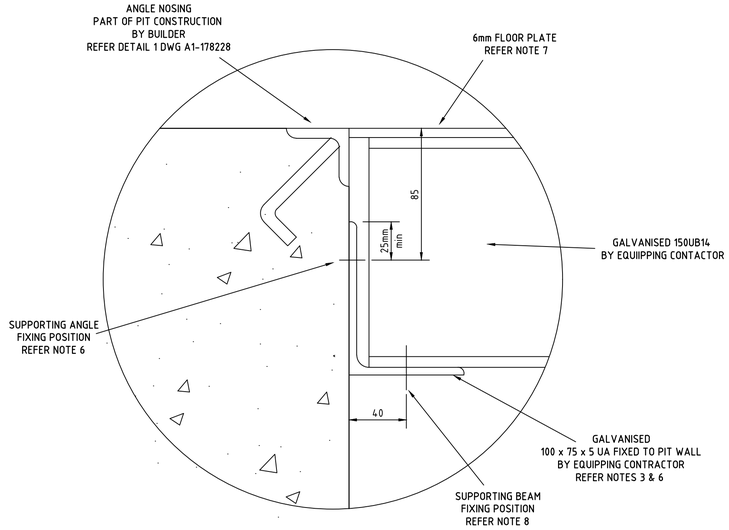

DETAIL Y
SUPPORT ANGLE FIXING
SCALE 1:2

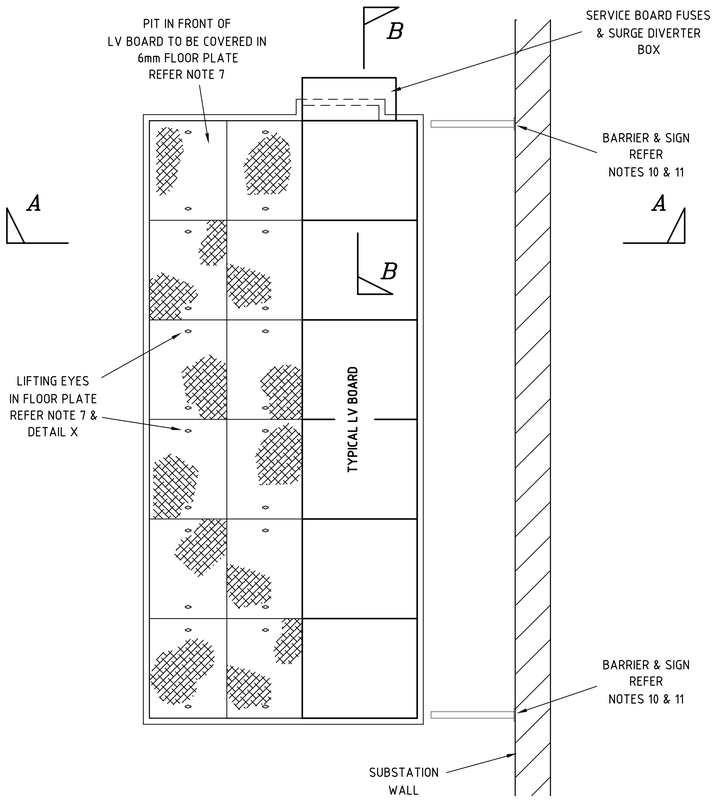

PLAN SHOWING
TYPICAL LV BOARD & FLOOR PLATE OVER PIT
SCALE 1:20

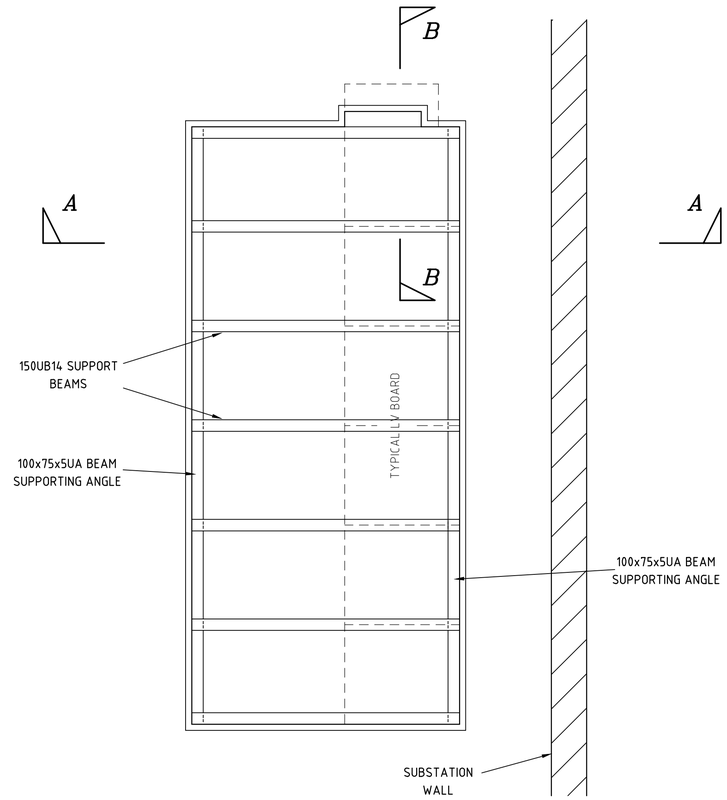

PLAN SHOWING
TYPICAL LV BOARD SUPPORTING STEELWORK
SCALE 1:20

NOTES

1. THIS DRAWING SHOWS THE ARRANGEMENT OF SUPPORTING STEELWORK FOR A TYPICAL E TYPE LV BOARD. FOR THE ARRANGEMENT OF THE E TYPE LV BOARD FOR AN INDIVIDUAL SUBSTATION REFER TO THE DESIGN INFORMATION AND DRAWINGS OF THAT SUBSTATION.
2. THIS DRAWING IS TO BE READ IN CONJUNCTION WITH RELEVANT NETWORK STANDARDS.
3. THE SUBSTATION EQUIPPING CONTRACTOR IS TO SUPPLY AND FIT THE SUPPORTING STEELWORK & FLOOR PLATE COVERS TO SUIT THE LV BOARD ARRANGEMENT.
4. THE 150UB14 SUPPORTING BEAMS & 100x75x5EA BEAM SUPPORT ANGLES ARE TO BE GALVANISED. GALVANISING MUST BE RESTORED TO ANY CUT OR DRILLED ITEM WITH A CORROSIVE RESISTANT PRODUCT SUCH AS "ZINCFIX".
5. SWITCHBOARD SUPPORTING BEAMS ARE TO BE CONTINUOUS, WELDED OR BOLTED SECTIONS ARE NOT PERMITTED. BEAM SUPPORTING ANGLES CAN BE IN MULTIPLE SECTIONS PROVIDED THEY ADEQUATELY SUPPORT SWITCHBOARD BEAMS AND THEIR FIXINGS DO NOT INTERFERE WITH FLOOR CHASES OR CONDUIT ENTRY. IT IS PERMITABLE TO PROVIDE BEAM SUPPORT ANGLES ACROSS FLOOR CHASE OPENINGS.
6. THE 100x75x5UA BEAM SUPPORT ANGLES ARE TO BE FIXED TO THE PIT WALL WITH HILTI HVU M12 CHEMICAL CAPSULE WITH HAS-E-F M12 ROD (HD GALAVINISED). STANDARD EMBEDMENT IS TO BE 125mm.
   EACH FIXING IS TO BE NOT MORE THAN 150mm FROM EACH END AT NOT MORE THAN 600mm CENTRES.
   SUPPORT ANGLES MUST BE FIXED TO PIT WALLS SUCH THAT WHEN SWITCHBOARD SUPPORTING BEAMS ARE INSTALLED THEY DO NOT REQUIRE PACKING TO BE LEVEL IN EACH DIRECTION.
7. THE EQUIPPING CONTRACTOR IS TO SUPPLY AND FIT THE FLOOR PLATE COVERS.
   FLOOR PLATE COVERS ARE TO BE ARRANGED AS SHOWN ON THIS DRAWING, PROVIDING THE MAXIMUM ACCESS TO THE PIT IN FRONT OF EACH INDIVIDUAL LV BOARD PANEL.
   EACH PIECE OF FLOOR PLATE SHALL NOT EXCEED 20kg IN MASS AND IS TO BE PROVIDED WITH TWO LIFTING EYES AS PER DETAIL X.
   EACH PIECE OF FLOOR PLATE IS TO FINISHED BY HOT DIP GALVANISING TO AS 4680. THE FLOOR PLATES ARE TO BE STRAIGHTENED AFTER GALVANISING.
8. BEFORE INSTALLING THE LV BOARD PANELS THE EQUIPPING CONTRACTOR IS TO FIX EACH SUPPORTING BEAM TO THE SUPPORTING ANGLES WITH GALVANISED M12 NUTS & BOLTS. A MINIMUM OF ONE FIXING POINT IS REQUIRED AT EACH END OF EACH BEAM.
9. EACH INDIVIDUAL PANEL OF THE LV BOARD IS TO BE FIXED TO ITS SUPPORT BEAMS USING GALVANISED M12 NUTS AND BOLTS.
10. BARRIERS ARE TO CONSIST OF A STURDY METAL RAIL, SUCH AS UNISTRUT P2663-550, WHICH ARE FIXED TO THE WALL 1000mm ABOVE THE SUBSTATION FLOOR IN THE LOCATIONS SHOWN. BARRIERS ARE NOT TO BE CONNECTED TO THE LV BOARD.
11. EACH BARRIER IS TO FITTED WITH THE SIGN SHOWN IN DETAIL Z. THE SIGNS ARE TO BE MADE FROM SELF ADHESIVE MATERIAL FIXED TO 0.6mm COLOURBOND BACKING. LETTERING IS BE 50mm HIGH RED COLOURED BOLD FONT ON A WHITE BACKGROUND. SIGNS ARE TO BE FIXED TO BARRIERS WITH SUITABLE SCREWS.

REFERENCE DRAWINGS	
E TYPE LV BOARD ACCEPTABLE COMBINATIONS	178227-1
E TYPE LV BOARD CLEARANCES, PIT DESIGN AND CONSTRUCTION	178228-1
E TYPE LV BOARD INSTALLATION OF CABLE LADDER FOR AUXILIARY CABLES	178230-1

CAD DRAWING
DO NOT MANUALLY AMEND

AMENDMENTS

1. SUPPORTING ANGLES REPOSITIONED & WERE 75x5EA. SUPPORTING ANGLE FIXING RELOCATED. NOTE 8 ADDED. NOTE 9 WAS NOTE 8.
P.JARVIS 20/08/2007
CHECKED: D.STANBURY
APPROVED: M.THOMSON
PN: 208/6/974

2. AUSGRID BORDER ADDED. DETAIL Y UPDATED, ANGLE NOSING IN DETAIL Y AND SECTIONS A-A & B-B UPDATED. BARRIERS, SIGNS, DETAIL Z AND NOTES 10 & 11 ADDED.
P.JARVIS 09/07/2012
CHECKED: P.TURRIN
APPROVED: P.TURRIN

3. AUSGRID BORDER UPDATED. NOTE 8 ALTERED TO ALIGN FLOOR PLATE FINISH WITH NETWORK STANDARD 113.
P.JARVIS 27/07/2016
CHECKED: P.TURRIN
APPROVED: P.TURRIN

4. BORDER & TITLE BLOCK UPDATED.
M.BENNETT 09/09/2024
CHECKED: L.MARTINUZZI
APPROVED: M.BENNETT

Ausgrid
24-28 Campbell Street
SYDNEY NSW 2000

ISSUED FOR
CONSTRUCTION

SCALE	AS SHOWN
DESIGNED	P.JARVIS
DRAWN	P.JARVIS
CHECKED	M.PEACOCK
APPROVED	P.HALLEN
DATE	06/03/2007
TRIM REF	-
PROJECT NUMBER	103/59/2/6

E TYPE LV BOARD
SUPPORTING STEELWORK
GENERAL ARRANGEMENT

DRAWING No 178229 | SHEET 1 | AMD 4 | SIZE A1

©